IK07 | IP65 | 3W LED | Colour

SAFE MINI D-T

MADE in GERMANY

Safety luminaire in compliance with EN 60598-1/2-22 and EN 1838.
Weather-proof housing made of aluminum die-casting with a pane of safety glass.
Model for ceiling mounting, hall downlight with a high-performance LED and downlight optics for high ceilings.
Cable inlet into the luminaire possible from the back.
Product includes an IP65 membrane pressure compensation valve.
Optionally, the luminaire can be delivered as a central battery version for a temperature range down to -35°C (unmonitored).
The self contained version is also available as a set with an external supply unit for indoor installation and lighting unit for outdoor mounting (suitable for a temperature range to -35°C).
Alternatively, the luminaire is available with a heating case incl. battery (4,8V 2,0Ah) to extend the temperature range in the luminaire to -20°C.

Technical specifications

Luminaire type	Luminaires for central battery systems	Self contained luminaires
Illuminant	3 W LED	3 W LED
Connecting terminals	3 x 2.5 mm² for double assignment	
Colour	white	
Material	Aluminum die-cast	
Mounting type	Ceiling mounting	
Additional mounting types*	Ceiling mounting (wire suspension)	
Dimensions (W x H x D)	DM 140 x 56 x 140 mm	
Protection class	IP65	
Safety class	I	
IK Safety class	IK07	
Light current (mains)	280 lm	120 lm
Light current (emergency)		
Battery duration 1h	–	280 lm
Battery duration 3h	–	280 lm
Battery duration 8h	–	120 lm
Luminous flux Emergency (DC) / mains		
Battery duration 1h	–	100% / 45%
Battery duration 3h	–	100% / 45%
Battery duration 8h	–	45% / 45%
Power consumption	6 VA	5 VA
Battery current input	15 mA	–
Battery duration Battery operation	–	1h / 3h / 8h
Voltage supply	230V 50/60Hz; 220V DC +25/-20%	230V 50/60Hz
NiMH-battery		
Battery duration 1h	–	4,8V 2,0Ah 4,8V 2,0Ah + AkH
Battery duration 3h	–	4,8V 2,0Ah 4,8V 2,0Ah + AkH
Battery duration 8h	–	4,8V 2,0Ah 4,8V 2,0Ah + AkH
Temperature range	-10°C to +40°C (monitored) / -20°C to +40°C (unmonitored)	–
Non-maintained mode	–	0°C to +35°C
Maintained mode	–	-5°C to +30°C
optional		
Multi-switch and monitoring module	DALI ELC MSÜ3 SET009 SET010	–
Self monitoring	–	SELF CHECK

Ceiling mounting

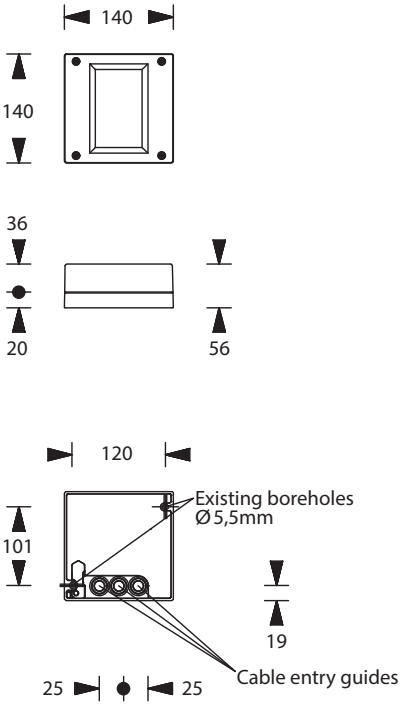

Technical changes reserved / 10.07.2026

Central monitoring	–	SAFELOG Line
Wireless monitoring	–	SAFELOG Wireless

* Optional accessory required

Accessories

Rear mounting bracket
Chain assembly set
Cable assembly set

Lighting data and tables of luminaire distances (E = 1,25 lx)

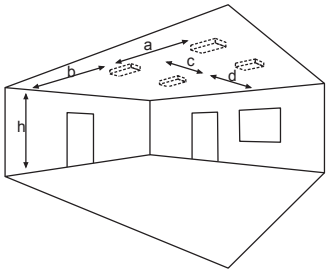

Ceiling mounting

Luminaires for central battery systems **downlight optics**

Distance table for plane emergency routes / distance data in meters

Illuminant: 3W LED

Luminous flux emergency / mains: 280lm

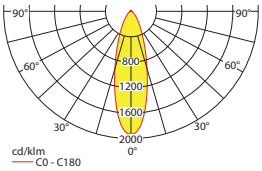

h	7.00	8.00	9.00	10.00	11.00	12.00	13.00	14.00	15.00	16.00	17.00	18.00	19.00	20.00
a	9.80	10.20	10.60	10.90	11.10	11.20	11.40	11.40	11.40	11.40	11.30	11.10	10.90	10.60
b	3.80	3.90	4.00	4.00	4.00	4.00	3.90	3.80	3.60	3.40	3.10	2.80	2.30	1.70
c	9.80	10.20	10.60	10.90	11.10	11.20	11.40	11.40	11.40	11.40	11.30	11.10	10.90	10.60
d	3.80	3.90	4.00	4.00	4.00	4.00	3.90	3.80	3.60	3.40	3.10	2.80	2.30	1.70

Self contained luminaires **downlight optics**

Distance table for plane emergency routes / distance data in meters

Illuminant: 3W LED

Luminous flux emergency / mains: 280lm/120lm – **Battery duration: 1h**

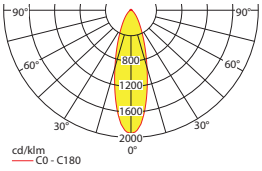

h	7.00	8.00	9.00	10.00	11.00	12.00	13.00	14.00	15.00	16.00	17.00	18.00	19.00	20.00
a	9.80	10.20	10.60	10.90	11.10	11.20	11.40	11.40	11.40	11.40	11.30	11.10	10.90	10.60
b	3.80	3.90	4.00	4.00	4.00	4.00	3.90	3.80	3.60	3.40	3.10	2.80	2.30	1.70
c	9.80	10.20	10.60	10.90	11.10	11.20	11.40	11.40	11.40	11.40	11.30	11.10	10.90	10.60
d	3.80	3.90	4.00	4.00	4.00	4.00	3.90	3.80	3.60	3.40	3.10	2.80	2.30	1.70

Self contained luminaires **downlight optics**

Distance table for plane emergency routes / distance data in meters

Illuminant: 3W LED

Luminous flux emergency / mains: 280lm/120lm – **Battery duration: 3h**

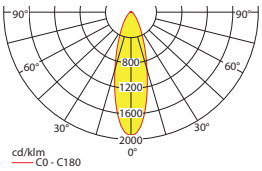

h	7.00	8.00	9.00	10.00	11.00	12.00	13.00	14.00	15.00	16.00	17.00	18.00	19.00	20.00
a	9.80	10.20	10.60	10.90	11.10	11.20	11.40	11.40	11.40	11.40	11.30	11.10	10.90	10.60
b	3.80	3.90	4.00	4.00	4.00	4.00	3.90	3.80	3.60	3.40	3.10	2.80	2.30	1.70
c	9.80	10.20	10.60	10.90	11.10	11.20	11.40	11.40	11.40	11.40	11.30	11.10	10.90	10.60
d	3.80	3.90	4.00	4.00	4.00	4.00	3.90	3.80	3.60	3.40	3.10	2.80	2.30	1.70

Self contained luminaires **downlight optics**

Distance table for plane emergency routes / distance data in meters

Illuminant: 3W LED

Luminous flux emergency / mains: 120lm/120lm – **Battery duration: 8h**

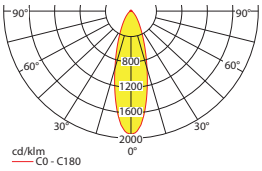

h	7.00	8.00	9.00	10.00	11.00	12.00	13.00
a	7.20	7.40	7.40	7.50	7.40	7.20	7.00
b	2.60	2.60	2.50	2.30	2.10	1.70	1.20
c	7.20	7.40	7.40	7.50	7.40	7.20	7.00
d	2.60	2.60	2.50	2.30	2.10	1.70	1.20