IP54 | IP20 | 2x3W LED | Colour

SPOT-LIGHT 100 ER-2R

MADE in GERMANY

Safety luminaire in compliance with EN 60598-1/2-22 and EN 1838.
Nearly ceiling-flush recessed safety luminaire with round head made of white polycarbonate and protection class IP54 at the luminaire head. Available with different supply containers depending on the variant.
To reduce maintenance costs, the luminaire in the single battery variant has an easily accessible battery that can be replaced without tools.
A square cover frame is available as an option.
Equipped with two 3W power LEDs and additional aluminum LED heat sink.

Technical specifications

Luminaire type	Luminaires for central battery systems	Self contained luminaires
Illuminant	2 x 3 W LED	2 x 3 W LED
Connecting terminals	2 x 2.5 mm² for double assignment	
Colour	white	
Material	Aluminum die-cast/Polycarbonate	
Mounting type	Recessed mounting	
Dimensions (Ø x D)	DE 100 x 45 mm	
Dimensions Container (W x H x D)	238 x 84 x 45 mm	
Ceiling cutout (Ø)	86 mm	
Min. installation depth	100 mm	
Protection class	IP54	
Protection class container	IP20	
Safety class	II	
IK Safety class	IK03	
Light current (mains)	480 lm	360 lm
Light current (emergency)		
Battery duration 1h	–	480 lm
Battery duration 3h	–	480 lm
Battery duration 8h	–	240 lm
Luminous flux Emergency (DC) / mains		
Battery duration 1h	–	100% / 75%
Battery duration 3h	–	100% / 75%
Battery duration 8h	–	50% / 75%
Power consumption	10 VA	8 VA
Battery current input	25 mA	–
Battery duration Battery operation	–	1h / 3h / 8h
Voltage supply	230V 50/60Hz; 220V DC +25/-20%	230V 50/60Hz
NiMH-battery		
Battery duration 1h	–	4,8V 2,0Ah
Battery duration 3h	–	4,8V 4,2Ah
Battery duration 8h	–	4,8V 4,2Ah
Temperature range	-10°C to +40°C	–
Non-maintained mode	–	0°C to +35°C
Maintained mode	–	-5°C to +30°C
optional		
Multi-switch and monitoring module	DALI ELC MSÜ3 SET009 SET010	–
Self monitoring	–	SELF CHECK
Central monitoring	–	SAFELOG Line
Wireless monitoring	–	SAFELOG Wireless

Recessed mounting

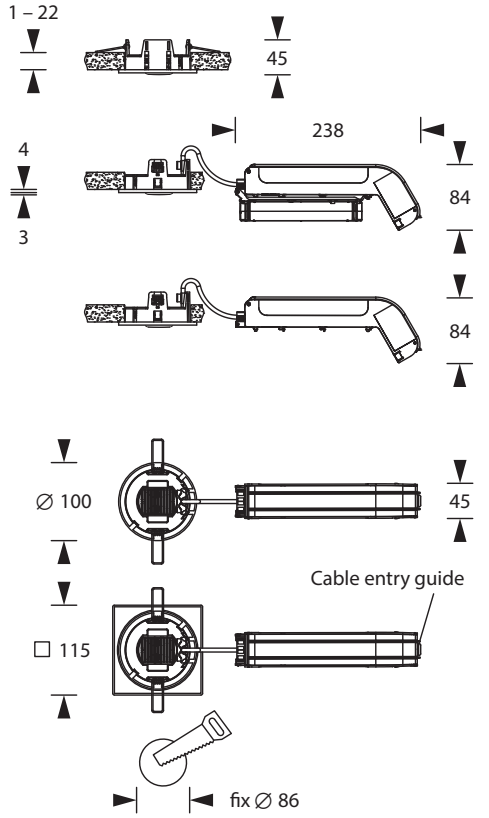

Attention: Minimum installation depth 100mm

Technical changes reserved / 10.07.2026

Accessories

Ceiling frame - Polycarbonate
Universal cover plate

Lighting data and tables of luminaire distances (E = 1,25 lx)

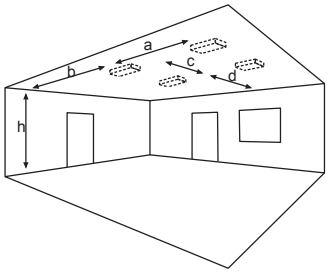

Ceiling mounting

Luminaires for central battery systems **escape route optics**

Distance table for plane emergency routes / distance data in meters

Illuminant: 2 x 3W LED

Luminous flux emergency / mains: 480lm

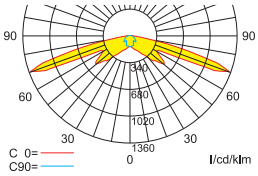

h	2.50	3.00	3.50	4.00	4.50	5.00	5.50	6.00	6.50	7.00	7.50	8.00	8.50	9.00	9.50	10.00
a	–	–	–	–	–	–	–	–	–	–	–	–	–	–	–	–
b	–	–	–	–	–	–	–	–	–	–	–	–	–	–	–	–
c	20.10	22.70	25.00	27.10	26.30	25.80	26.60	20.60	21.20	21.60	21.50	21.40	19.90	11.00	11.00	10.50
d	8.90	9.90	10.80	7.40	7.40	7.60	8.00	8.30	8.50	8.70	8.60	7.80	7.00	3.00	2.50	2.50

Self contained luminaires **escape route optics**

Distance table for plane emergency routes / distance data in meters

Illuminant: 2 x 3W LED

Luminous flux emergency / mains: 480lm/360lm – **Battery duration: 1h**

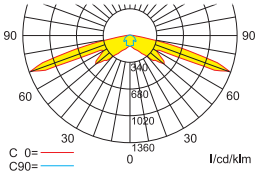

h	2.50	3.00	3.50	4.00	4.50	5.00	5.50	6.00	6.50	7.00	7.50	8.00	8.50	9.00	9.50	10.00
a	–	–	–	–	–	–	–	–	–	–	–	–	–	–	–	–
b	–	–	–	–	–	–	–	–	–	–	–	–	–	–	–	–
c	20.10	22.70	25.00	27.10	26.30	25.80	26.60	20.60	21.20	21.60	21.50	21.40	19.90	11.00	11.00	10.50
d	8.90	9.90	10.80	7.40	7.40	7.60	8.00	8.30	8.50	8.70	8.60	7.80	7.00	3.00	2.50	2.50

Self contained luminaires **escape route optics**

Distance table for plane emergency routes / distance data in meters

Illuminant: 2 x 3W LED

Luminous flux emergency / mains: 480lm/360lm – **Battery duration: 3h**

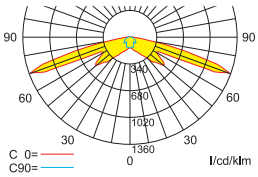

h	2.50	3.00	3.50	4.00	4.50	5.00	5.50	6.00	6.50	7.00	7.50	8.00	8.50	9.00	9.50	10.00
a	–	–	–	–	–	–	–	–	–	–	–	–	–	–	–	–
b	–	–	–	–	–	–	–	–	–	–	–	–	–	–	–	–
c	20.10	22.70	25.00	27.10	26.30	25.80	26.60	20.60	21.20	21.60	21.50	21.40	19.90	11.00	11.00	10.50
d	8.90	9.90	10.80	7.40	7.40	7.60	8.00	8.30	8.50	8.70	8.60	7.80	7.00	3.00	2.50	2.50

Self contained luminaires **escape route optics**

Distance table for plane emergency routes / distance data in meters

Illuminant: 2 x 3W LED

Luminous flux emergency / mains: 240lm/360lm – **Battery duration: 8h**

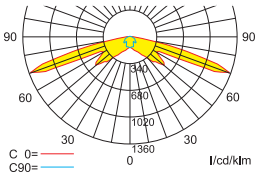

h	2.50	3.00	3.50	4.00	4.50	5.00
a	–	–	–	–	–	–
b	–	–	–	–	–	–
c	17.80	18.50	18.20	14.80	14.70	14.60
d	7.70	5.10	5.40	5.70	5.70	5.60