40m | IP54 | 2x2W LED | Colour

KBOX 400 UM

MADE in GERMANY

Exit luminaire in compliance with EN 60598-1/2-22 and EN 1838.
Modern IP54 escape sign luminaire made of white polycarbonate for universal mounting.
Simple, tool-free mounting with click system.
The luminaire can be used for single-sided wall mounting, double-sided ceiling mounting or bracket mounting. For wall mounting, the installation is done via a fixed enclosed back plate, for ceiling and bracket mounting via a click adapter, which is enclosed with the luminaire.
In addition, the luminaire has light emission windows facing downwards.
The luminaire price includes one pictogram set - arrow left/right/down/up/blind (Visibility distance 40 m).
The luminaire is equipped with a 2 x 2 Watt LED-bar.

Technical specifications

Luminaire type	Luminaires for central battery systems	Self contained luminaires
Illuminant	2 x 2 W LED-bar	2 x 2 W LED-bar
Visibility distance	40 m	
Connecting terminals	2 x 2.5 mm² for double assignment	
Colour	white	
Material	Polycarbonate	
Mounting type	Wall-/ceiling mounting, wall bracket mounting	
Dimensions (W x H x D)	DM 420 x 241 x 80 mm WM 420 x 220 x 82 mm ALM 441 x 220 x 80 mm	
Protection class	IP54	
Safety class	II	
IK Safety class	IK03	
Light current (mains)	460 lm	460 lm
Luminous flux Emergency (DC) / mains		
Rated operating time 1h	–	40% / 100%
Rated operating time 3h	–	40% / 100%
Rated operating time 8h	–	25% / 100%
Power consumption	8.9 VA	9.6 VA
Battery current input	25 mA	–
Battery duration Battery operation	–	1h / 3h / 8h
Voltage supply	230V 50/60Hz; 220V DC +25/-20%	230V 50/60Hz
NiMH-battery		
Rated operating time 1h	–	4,8V 2,0Ah
Rated operating time 3h	–	4,8V 2,0Ah
Rated operating time 8h	–	4,8V 2,0Ah
Temperature range	-10°C to +40°C	–
Non-maintained mode	–	0°C to +35°C
Maintained mode	–	-5°C to +30°C
optional		
Multi-switch and monitoring module	DALI ELC MSÜ3 SET009 SET010	–
Self monitoring	–	SELF CHECK
Central monitoring	–	SAFELOG Line
Wireless monitoring	–	SAFELOG Wireless

Ceiling mounting

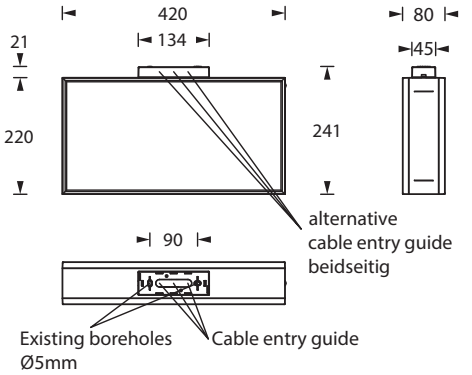

Wall mounting

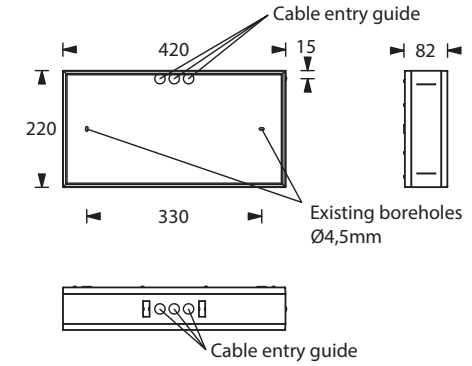

Bracket mounting

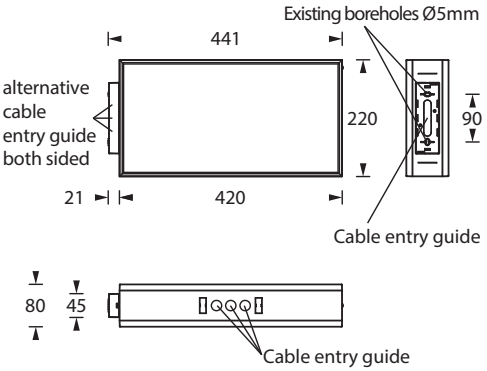

Technical changes reserved / 07.01.2026

Pictogram-set - included in the delivery

Optional pictograms (-sets)

Accessories

Chain assembly set
Central pendulum - Plastic
Cable assembly set
Pictograms