IP40 | 3W LED | Colour

BEAM ACW-R

MADE in GERMANY

Safety luminaire in compliance with EN IEC 60598-1/2-22 and EN 1838.
Flat, architecturally attractive die-cast aluminum housing. Screwless, easy-to-use locking mechanism.
Version for wall mounting with cast acrylic optics for illumination of escape routes due to narrow beam light control characteristics.

Technical specifications

Luminaire type	**Luminaires for central battery systems**	**Self contained luminaires**
Illuminant	3 W LED	3 W LED
Connecting terminals	3 x 2.5 mm² for double assignment	
Colour	white	
Material	Aluminum die-cast	
Mounting type	Wall mounting	
Dimensions (W x H x D)	WM 180 x 180 x 65 mm	
Protection class	IP40	
Safety class	I	
IK Safety class	IK03	
Light current (mains)	280 lm	50 lm
Light current (emergency)		
Battery duration 1h	–	280 lm
Battery duration 3h	–	280 lm
Battery duration 8h	–	120 lm
Luminous flux Emergency (DC) / mains		
Battery duration 1h	–	100% / 20%
Battery duration 3h	–	100% / 20%
Battery duration 8h	–	45% / 20%
Power consumption	6 VA	5 VA
Battery current input	15 mA	–
Battery duration Battery operation	–	1h / 3h / 8h
Voltage supply	230V 50/60Hz; 220V DC +25/-20%	230V 50/60Hz
NiMH-battery		
Battery duration 1h	–	4,8V 2,0Ah
Battery duration 3h	–	4,8V 2,0Ah
Battery duration 8h	–	4,8V 2,0Ah
Temperature range	-10°C to +40°C	–
Non-maintained mode	–	0°C to +35°C
Maintained mode	–	-5°C to +30°C
optional		
Multi-switch and monitoring module	DALI ELC MSÜ3 SET009 SET010/025	–
Self monitoring	–	SELF CHECK
Central monitoring	–	SAFELOG Line
Wireless monitoring	–	SAFELOG Wireless

Wall mounting

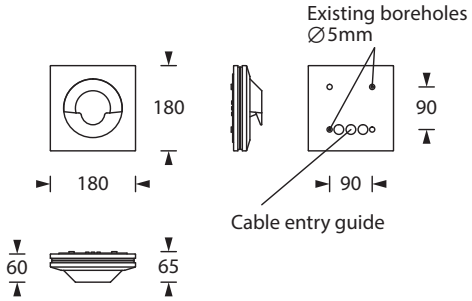

Accessories

Back box

Technical changes reserved / 11.09.2026

Lighting data and tables of luminaire distances (E = 1,25 lx)

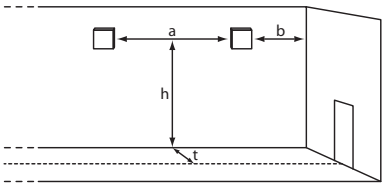

Wall mounting

Luminaires for central battery systems **escape route optics**

Distance table for plane emergency routes / distance data in meters

Illuminant: 3W LED

Luminous flux emergency / mains: 280lm

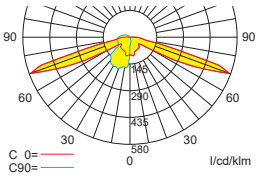

t = 1.00	h	1.90	2.10	2.30	2.50	2.70	2.90	3.10	3.30	3.50
	a	15.20	16.70	17.70	18.50	19.50	20.50	21.20	21.90	23.00
	b	6.80	7.40	7.90	8.30	8.60	9.00	9.50	9.70	10.00
t = 1.50	h	1.90	2.10	2.30	2.50	2.70	2.90	3.10	3.30	3.50
	a	15.30	16.90	17.90	18.90	19.80	20.70	21.70	22.30	23.20
	b	6.50	7.00	7.80	8.50	8.70	9.10	9.40	9.70	10.00
t = 2.00	h	1.90	2.10	2.30	2.50	2.70	2.90	3.10	3.30	3.50
	a	8.00	8.50	8.70	9.10	13.60	14.90	18.50	20.90	22.80
	b	3.00	3.20	3.30	3.40	3.40	4.00	8.00	8.40	8.70

t = distance to escape middle

Self contained luminaires **escape route optics**

Distance table for plane emergency routes / distance data in meters

Illuminant: 3W LED

Luminous flux emergency / mains: 280lm/50lm – **Battery duration: 1h**

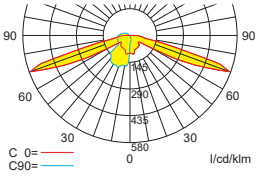

t = 1.00	h	1.90	2.10	2.30	2.50	2.70	2.90	3.10	3.30	3.50
	a	15.20	16.70	17.70	18.50	19.50	20.50	21.20	21.90	23.00
	b	6.80	7.40	7.90	8.30	8.60	9.00	9.50	9.70	10.00
t = 1.50	h	1.90	2.10	2.30	2.50	2.70	2.90	3.10	3.30	3.50
	a	15.30	16.90	17.90	18.90	19.80	20.70	21.70	22.30	23.20
	b	6.50	7.00	7.80	8.50	8.70	9.10	9.40	9.70	10.00
t = 2.00	h	1.90	2.10	2.30	2.50	2.70	2.90	3.10	3.30	3.50
	a	8.00	8.50	8.70	9.10	13.60	14.90	18.50	20.90	22.80
	b	3.00	3.20	3.30	3.40	3.40	4.00	8.00	8.40	8.70

t = distance to escape middle

Self contained luminaires **escape route optics**

Distance table for plane emergency routes / distance data in meters

Illuminant: 3W LED

Luminous flux emergency / mains: 280lm/50lm – **Battery duration: 3h**

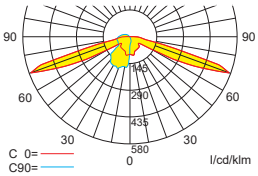

t = 1.00	h	1.90	2.10	2.30	2.50	2.70	2.90	3.10	3.30	3.50
	a	15.20	16.70	17.70	18.50	19.50	20.50	21.20	21.90	23.00
	b	6.80	7.40	7.90	8.30	8.60	9.00	9.50	9.70	10.00
t = 1.50	h	1.90	2.10	2.30	2.50	2.70	2.90	3.10	3.30	3.50
	a	15.30	16.90	17.90	18.90	19.80	20.70	21.70	22.30	23.20
	b	6.50	7.00	7.80	8.50	8.70	9.10	9.40	9.70	10.00
t = 2.00	h	1.90	2.10	2.30	2.50	2.70	2.90	3.10	3.30	3.50
	a	8.00	8.50	8.70	9.10	13.60	14.90	18.50	20.90	22.80
	b	3.00	3.20	3.30	3.40	3.40	4.00	8.00	8.40	8.70

t = distance to escape middle

Self contained luminaires **escape route optics**

Distance table for plane emergency routes / distance data in meters

Illuminant: 3W LED

Luminous flux emergency / mains: 120lm/50lm – **Battery duration: 8h**

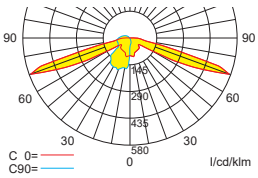

t = 1.00	h	1.90	2.10	2.30	2.50	2.70	2.90	3.10	3.30	3.50
	a	13.70	14.50	15.10	15.90	16.50	16.90	17.30	17.50	18.50
	b	5.80	6.10	6.40	6.70	6.80	6.70	5.60	4.00	3.70
t = 1.50	h	1.90	2.10	2.30	2.50	2.70	2.90	3.10	3.30	3.50
	a	6.50	7.50	10.10	13.10	15.50	15.10	15.30	15.30	–
	b	3.50	4.30	2.60	3.00	3.10	3.20	3.50	1.00	–
t = 2.00	h	1.90	2.10	2.30	2.50	2.70	2.90	3.10	3.30	3.50
	a	4.50	4.90	4.70	4.70	3.00	3.10	–	–	–
	b	1.90	0.50	0.40	0.50	0.70	0.60	–	–	–

t = distance to escape middle