22m | IP54 | 1W LED | Colour

L-PLAST 250-M UM

MADE in GERMANY

Exit luminaire in compliance with EN 60598-1/2-22 and EN 1838.
Polycarbonate housing with opal luminaire cover for adhesive pictograms on both sides for wall or ceiling mounting. Possibility of recessed ceiling mounting with optional recessed ceiling frame
The luminaire price includes one pictogramfoil set - arrow left/right/down/up (Visibility distance 22 m).
The luminaire is supplied with a 1 Watt LED-bar.

Technical specifications

Luminaire type	Luminaires for central battery systems	Self contained luminaires
Illuminant	1 W LED-bar	1 W LED-bar
Visibility distance	22 m	
Connecting terminals	2 x 2.5 mm² for double assignment	
Colour	white	
Material	Polycarbonate (light cover opal)	
Mounting type	Wall-/ceiling mounting	
Dimensions (W x H x D)	WM/DM 239 x 164 x 59 mm DE 282 x 35 x 88 mm	
Protection class	IP54	
Safety class	II	
IK Safety class	IK03	
Light current (mains)	130 lm	130 lm
Luminous flux Emergency (DC) / mains		
Rated operating time 1h	–	50% / 100%
Rated operating time 3h	–	50% / 100%
Rated operating time 8h	–	25% / 100%
Power consumption	4.5 VA	4.5 VA
Battery current input	11 mA	–
Battery duration Battery operation	–	1h / 3h / 8h
Voltage supply	230V 50/60Hz; 220V DC +25/-20%	230V 50/60Hz
NiMH-battery		
Rated operating time 1h	–	4,8V 0,8Ah
Rated operating time 3h	–	4,8V 0,8Ah
Rated operating time 8h	–	4,8V 0,8Ah
Temperature range	-10°C to +40°C	–
Non-maintained mode	–	0°C to +35°C
Maintained mode	–	-5°C to +30°C
optional		
Multi-switch and monitoring module	ELC MSÜ3 SET009 SET010	–
Self monitoring	–	SELF CHECK
Central monitoring	–	SAFELOG Line
Wireless monitoring	–	SAFELOG Wireless

Ceiling mounting

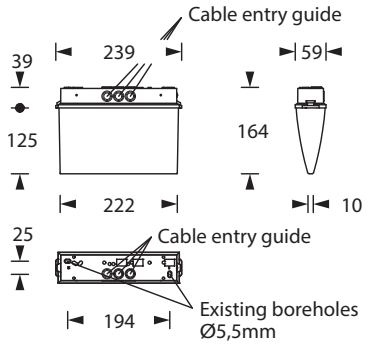

Wall mounting

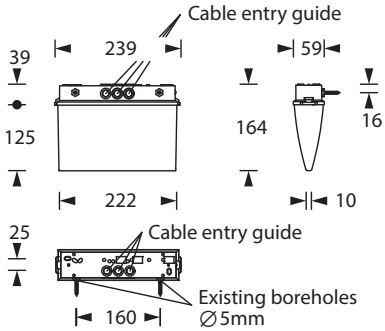

Technical changes reserved / 08.01.2026

Pictogram-set - included in the delivery

Optional pictograms (-sets)

Accessories

Wire guard
Recessed ceiling frame - clampable
Chain assembly set
Central pendulum - Plastic
Cable assembly set
Pictograms